A proposal of a bi-directional amplifier based on tunneling diodes for RF tagging system

A. Cidronali*, G. Collodi*, M. Deshpande+, N. El-Zein+, G.Manes*, V. Nair+
*Dept. Electronics and Telecommunications, University of Florence, V.S.Marta, 3 I-50139 Firenze - ITALY
contact: acidronali@ingfi1.ing.unifi.it
+Physical Sciences Research Laboratory, Motorola Labs, Motorola Inc., 7700 S. River Parkway, Tempe AZ-85284 USA

Abstract- A bi-directional amplifier (BDA) utilizing the negative resistance of Heterojunction Interband Tunnel Diode (HITD) is proposed. Expected features of the BDA are: 1) symmetry and reciprocity of the associated scattering matrix; 2) gain at extremely low DC power consumption. These features make the circuits an enabling electronic function for RF identification tag. The BDA topology consisted of a pair of HITDs biased in the negative dynamic region (NDR) and a lumped element directional coupler with arbitrary impedance terminations. The design techniques along with an experimental validation are provided.

Introduction- Today's microelectronic market is increasingly driven by the need to make information technology more convenient to use instantly and wireless accessible, which translates to cheaper, faster and less power-hungry integrated circuit designs. For many years this has been satisfied largely by scaling devices to ever smaller dimensions, but this approach will soon run into physical limits: limits of the materials used, but also fundamental limits arising from the laws of quantum mechanics which become increasingly important at very small length scales. The consequence is that further scaling will achieve diminishing performance enhancements, and continued improvement will require new device designs and corresponding new circuit architectures. One promising approach is to take advantage of quantum-mechanical effects such as tunnelling, which allows a Negative Differential Resistance (NDR) in the current-voltage characteristic [1], [2]. This is a useful behaviour for various applications and, since tunnelling is inherently a very fast process, such devices have the potential for high-frequency operation. Also, because conduction in these devices is normally in the vertical direction, they can be laterally scaled to very small dimensions, allowing compact circuitry, and low power consumption. These considerations open the door to the wireless application of the quantum devices. A tagging system, as the ones referred in this work [2], is a particular kind of short range microwave link (SRML), arranged on the basis of picocell of the order of some square meters. Each cell is equipped with an RF antenna which is usually mounted in the center of the cell in a convenient location which allows interference and obstacle fading strength. Each antenna is connected to a "reader" which controls the communications between the tag mounted on the host and the antenna in the middle of the cell. This equipment is usually referred as transceiver (TXeiver). The reader sends out a signal (via the antenna) to the tag which lets the tag know that it should begin communication. The tag returns a unique ID number which is used to identify the host. In the case of read/write tags or smart tags, additional information may be transmitted by the tag (e.g. any ambient related information) and the reader may send back updated information to be encoded on the tag/smart card. The proposed solution considers the reflective scheme, Fig.1, composed of a Rx-Tx patch antenna, the bi-directional amplifier (BDA) a high sensitivity detector, a LPF and a control unit [2]. It is possible to identify the two operation modes. Receiving mode, Fig.1a: the circuit acts as a direct conversion receiver. In this mode the incoming signal is first filtered to proper bandwidth using the bandpass filter network to reduce the interference and then amplified by the BDA. The BDA works as a direction antenna-detector and its gain can be adjusted to the desired coverage range. The detector may be implemented by a tunnel diode thanks to its inherent low level sensitivity, low $\frac{1}{f}$ noise and the low impedance (typically 10-100 ohm) at zero bias. The decision unit verifies the detected band-base signal and in case of certain ID identification switch in its second state, the back-scattering mode. In the receiving mode the absorbed DC power is almost all due to the BDA (if the power consumption of the control unit is neglected). Typical power consumption are 0.1mW for a 6dB gain, this means one year of continuous work if the system is powered by for a 1Ah battery. For a ~7m of coverage at 5.8 GHz, the channel study, carried out for an indoor communication using the above defined data, predicts a a diode sensitivity of -52dBm. Back-scattered mode: In this operation mode, the BDA is terminated at a port to the antenna and to the other port to the tunnel diode. The circuit schematic is shown in Fig.1b. In this mode the diode is driven by a two-state signal at zero bias and V_{peak}. In these two states the diode assumes different impedance values and consequently different reflection coefficients. This allows a variable back-scattered gain independent of the diode states and consequently the AM transmitted signal [2]. The HITD technology, implemented through the single well diode structure, seems to be a good candidate for implementation of such system [3].

Design of the Bidirectional Amplifier- The operation principle of the BDA is conceptually very simple. By combining the negative resistance, shown by a HITD biased in NDR, and a directional coupler, it is possible to obtain the scattering matrix: $\underline{\underline{S}} = \begin{vmatrix} S_r & S_t \\ S_t & S_r \end{vmatrix}$ where S_t represents the amplifier gain, while S_r is the reflection coefficient, (Fig. 2a). It is straightforward to show that an ideal directional coupler, whose reactive components are absorbed by the combining structure, can have a very low reflection at the input and out port. The principle of operation is sketched in the Fig. 2b, where the HITDs are represented by their equivalent impedance with a negative real part.

Defining Z2 as the directional coupler impedance seen by the HITD, by a simple calculation turns out that, the BDA gain is:

$$gain = \Gamma e^{j\frac{\pi}{2}} \quad (1) \qquad \text{where:} \qquad \Gamma = \frac{Z2 + |R_D|}{Z2 - |R_D|} \quad (2)$$

and R_D is the diode negative dynamic resistance. From (1) and (2) it is seen that the amplifier gain depends on the matching between the system impedance and the diode negative resistance R_D. The value can be selected adjusting either the diode characteristic or the directional coupler characteristic [4], [5]. This allows designers to use the characteristics impedance as design parameter, [5]. A main issue regarding the BDA concerns with its stability. It is a matter of fact that any negative resistance based circuit, may present undesired oscillations [6]-[7]. This possibility is likely for devices whose cut-off frequency approaches the millimeter frequency range. We shall also see that, under certain conditions, the required operating diode state combined with a network will result in a stable amplifier. The design method considers the circuit analysis theory that shows any stable network must have an equivalent circuit impedance having no zero with real part in the right half of the complex plane, $s=\alpha+j\omega$. The problem of determining the BDA stability then reduces to determining the roots of the associated input impedance. In particular in this work we utilized the well-known Nyquist's criterion [6]. This Criterion relates the number of times the locus of the input impedance of a network encircles the origin in a counterclockwise direction as ω increases to the number of pole (P) minus the number of zero (N) with $\alpha>0$. To illustrate how the stability consideration governs the design of the BDA, consider the schematic circuit of Fig.3a, which is the complete lumped element circuit of the block diagram in Fig2a. It consists of a lumped element directional coupler whose design formula are reported in [5]. For a given R_D, selecting the system impedance Z2 results the amplifier gain. To this end it is necessary to verify the stability of the network for the designed Z2 and consequently, gain. In spite of the gain definition reported above, it is a simple guess that not all value of gain may be implemented in a stable operation mode. To investigate the stability of this circuit, it is possible to follow the even-mode and odd-mode analysis approach for symmetrical network and associated equivalent circuits. For even-mode excitation, unity voltages in the same phase are applied to ports 1 and 2 while the other ports are terminated with the HITD. For the odd-mode unity voltages in opposite phase excitation are applied to ports 1 and 2 while the others are terminates with HITD. Fig.4 (b) and (c) show the circuits for the odd- and even-mode excitation, respectively. The design proceeds analyzing the input impedance for both the circuits, and selecting the value of Z2 which ensure gain and stability. The results of such an analysis for Z1=50Ωand Z2=90Ω are reported in Fig. 4. In this case the theoretical small-signal analysis shows a gain of 6dB at the center frequency of 5.8GHz. The number of encirclements is 2 for both the mode, and it may be shown that this is a condition for which N=0, where N is the number of zero with a positive real part hence,This nalaysis thus shows that the BDA is stable.The tunnel diodes used in this study and in the prorotype realization are heterojunction interband tunnel diodes (HITD's). It consists of a 500A, p+ doped InGaAs top contact layer, followed by a 50nm p+ doped InAlAs layer and finally a 100nm n+ doped InGaAs bottom contact layer. These heterostructue interband tunnel diodes have shown very high current densities (50-60KA/cm^2) and peak to valley ratios between 10 and 15, [3]. Analysis of microwave performance permits to extimate a maximum frequency of oscillation around 110GHz for a 2.5x2.5μm^2. Finally a prototype, implemented on an InP substrate, is represented in Fig. 5a, and is realized in coplanar technology. The entire design has been carried out using the Momentum tool within the Agilent ADS package. This approach allows careful design of the dimensions of any element, and enables the consideration of any E.M. coupling between different parts of the circuit, giving a further compact arrangement, [8]. The measurement of both the S12 and S21 are also reported in Fig. 5b. The measurement shows a gain approaching 6dB which is slightly lower than the target value due to the loss in the passive part which are understimated during the design stage. However the good band-pass behaviour and the reciprocity demostrate the validity of the approach. The amplifer is biased at 400mV and drain 1mA of DC current.

Conclusion- A quantum device based bi-directional amplifier (BDA) has been proposed. The BDA topology consisted of a pair of HITDs biased in the negative differential region (NDR) and a lumped element directional coupler with arbitrary impedance terminations. The design technique has been demonstrated through a prototype working at 5.8 GHz. The amplifier gain is around 5dB, the DC power supply is 400μW. The circuit is very attractive for tagging applications due to extremely low the power consumption and simplicity of circuit

References:
[1] Y. Ando, A. Cappy, ”*Proposal of low-noise amplifier utilizing resonant tunneling transistors*”, IEEE Trans. On Electron Devices, Vol. 45, no. 1, Jan. 1998, pp. 31-35.
[2] A. Cidronali, G. Manes, ”*Report of a study on Quantum MMIC*”, private correspondence, work supported by Motorola Physical Research Lab. Under contract SI-122847: Quantum MMIC Design Consulting
[3] N. El-Zein, M. Deshpande, G. Kramer, J. Lewis, V. Nair, M. Kyler, S. Allen, and H. Goronkin, “*DC and RF Characterization of Different Heterojunction Interband Tunneling Diodes*”, International Conference on Indium Phosphide and Related Materials, May 2000, pp. 146-149
[4] F. Ali, A. Podell ,”*A wide band GaAs monolithic spiral qudrature hibrid and its circuit application*” IEEE-JSSC Vol. 26 nr.10, pp 1394-1398, Oct 1991
[5] A. Cidronali, G. Collodi, M. R. Deshpande , N. El-Zein , H. Goronkin, G.Manes, V. Nair, C. Toccafondi “*A MMIC lumped element directional coupler with arbitrary characteristic impedance and its application*”, GAAS 2000, October 2000, Paris France
[6] ”*Microwave Semiconductor Device and their application*”, H. A. Watson , McGraw-Hill Book Company NY.
[7] C. Kinder, I. Mehdi, J. R. East, G. I. Haddad, “Power and stability limitations of resonant tunnelling diodes“, IEEE Trans. on Microwave theory and technique, Vol. 38, no. 7, Jan. 1990, pp. 864-872.
[8] EM, Sonnet Software, Inc., Liverpool, NY.

FIGURES and CAPTIONS

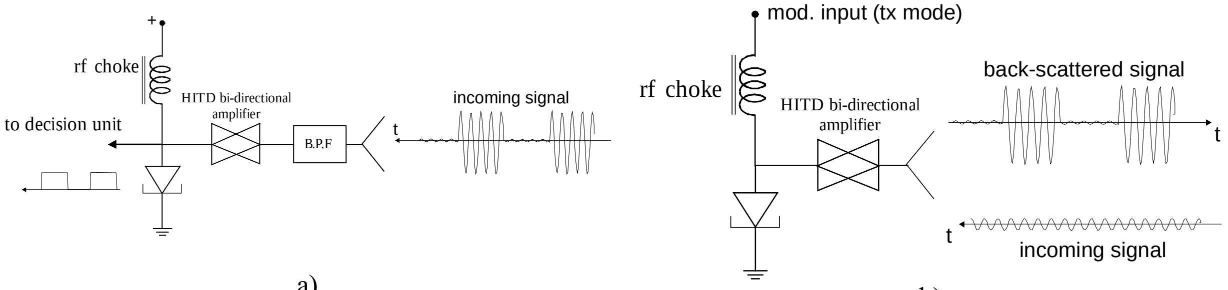

a) b)

Fig. 1: reflective tagging system: a) receiving mode, the down-link; b) transmitting model, the up-link

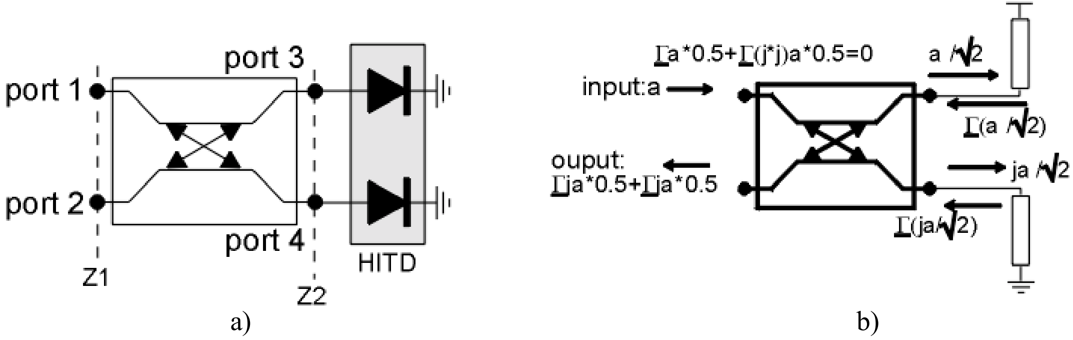

a) b)

Fig.2: bi-directional amplifier; a) simplified schematic, b) basic operation principle.

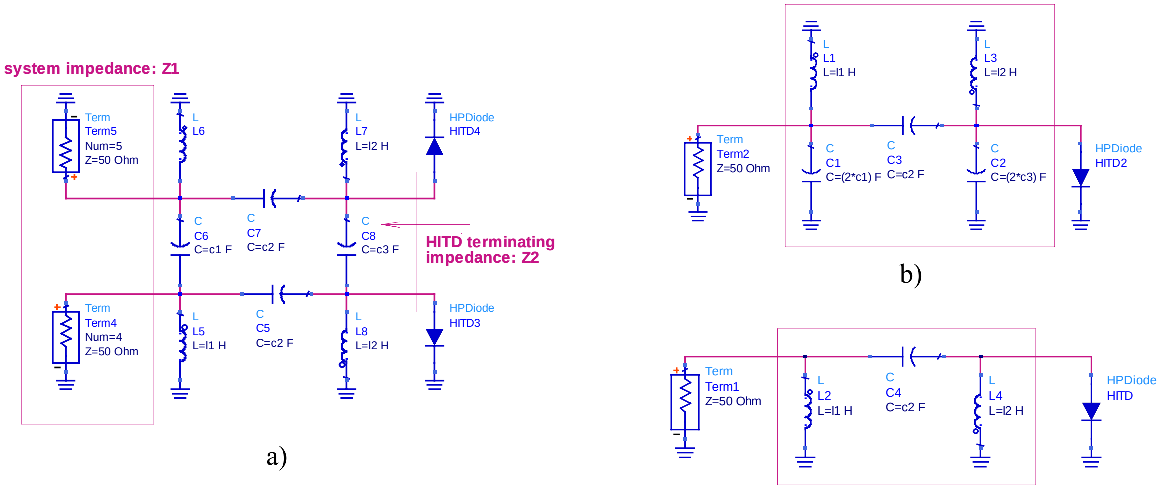

a)

b)

c)

Fig. 3: the schematic circuit for the BDA a), equivalent circuits for the odd-mode, b) and even-mode, c).

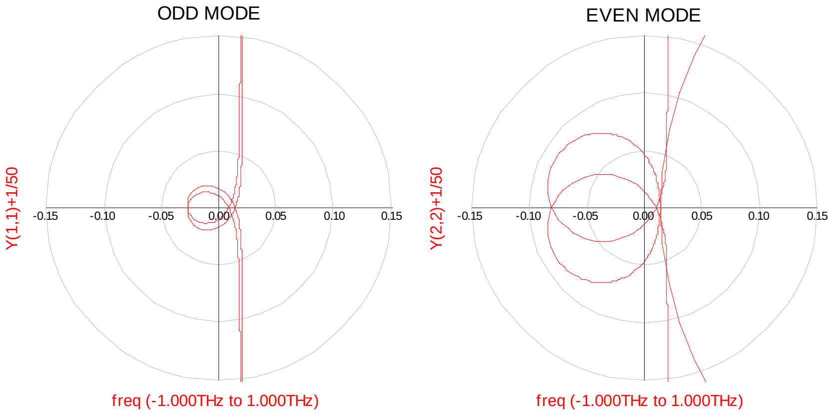

a)

b)

Fig. 4: (a) the locus of the odd-mode circuit, and (b) the even-node circuit. The number of conterclokwise encirclement give the stability criterion.

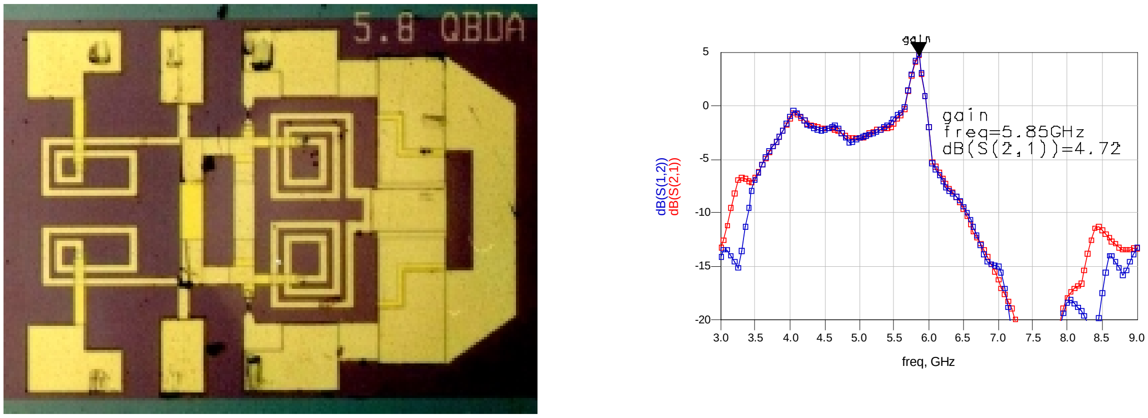

a)

b)

Fig. 5: prototype of the BDA a), experimental S21 and S12 b)